NOTE:
THIS DRAWING INDICATES AND ASSUMES THE USE OF BPT COMPOSITE CABLES OR A SUITABLE EQUIVALENT.

ENSURE ALL ADDITIONAL CONNECTIONS ARE A MINIMUM OF 0.5MM CSA PARALLEL CONDUCTORS.

INCORRECT CABLE SPEC CAN CAUSE DIGITAL SIGNALING PROBLEMS.

NOTE; CABLE EQUIVALENTS

VCM/130 = RG59 COAX + 4 CORES @ 1.0MMSQ + 8 CORES @ 0.5MMSQ

VCM/60 = RG59 COAX + 2 CORES @ 1.0MMSQ + 3 CORES @ 0.5MMSQ

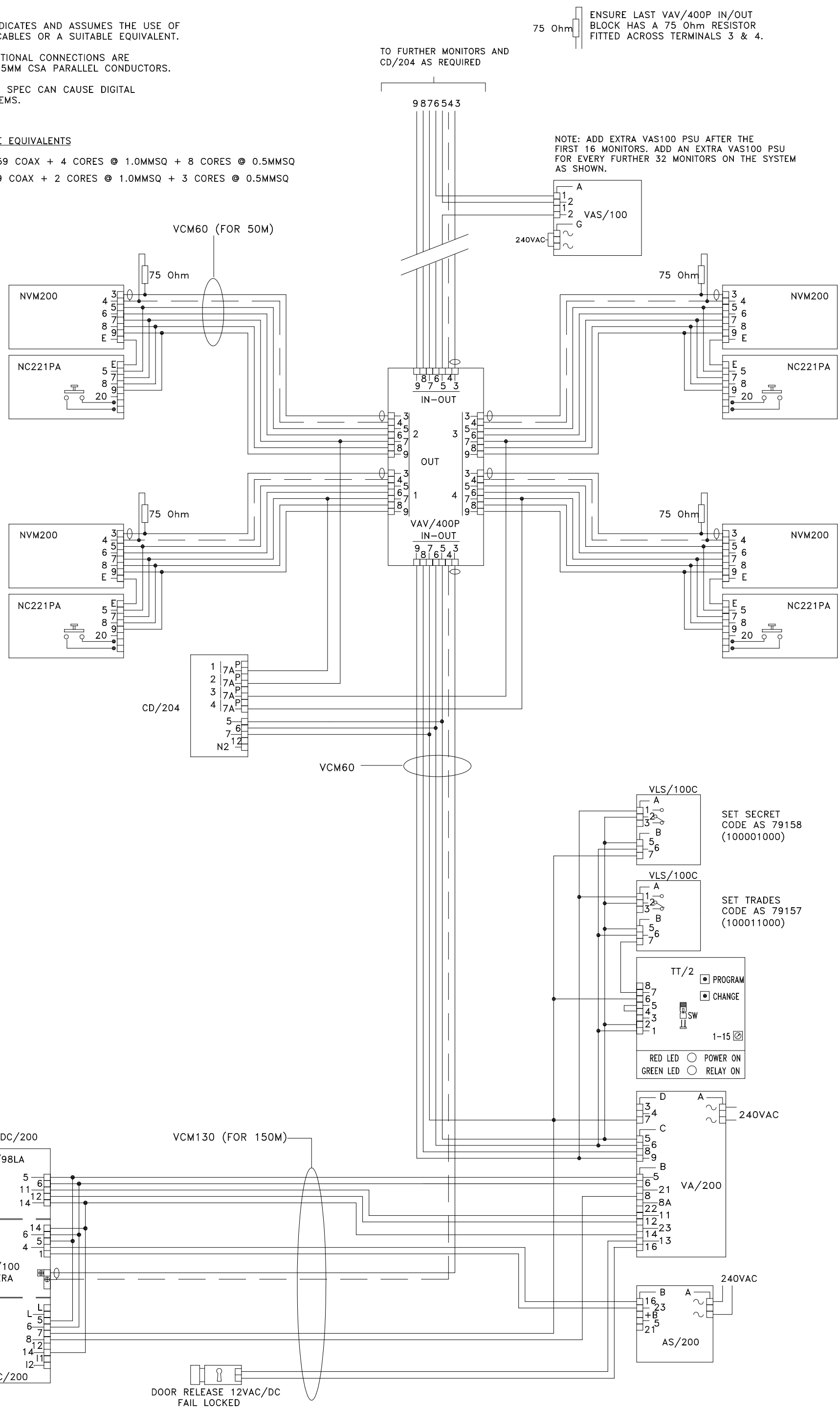

BPT (UK) LTD. HERTS. ENGLAND	PREPARED FOR INSTALLER INFORMATION	DATE: 19/09/05	DRAWN: RC
		REVISED:	
DRAWING TITLE:	1 x VR DIGITAL VIDEO ENTRY PANEL WITH TRADES & CODED ENTRY CALLING NOVA VIDEO MONITORS	DRAWING No: B-XV1YNLTTVL	